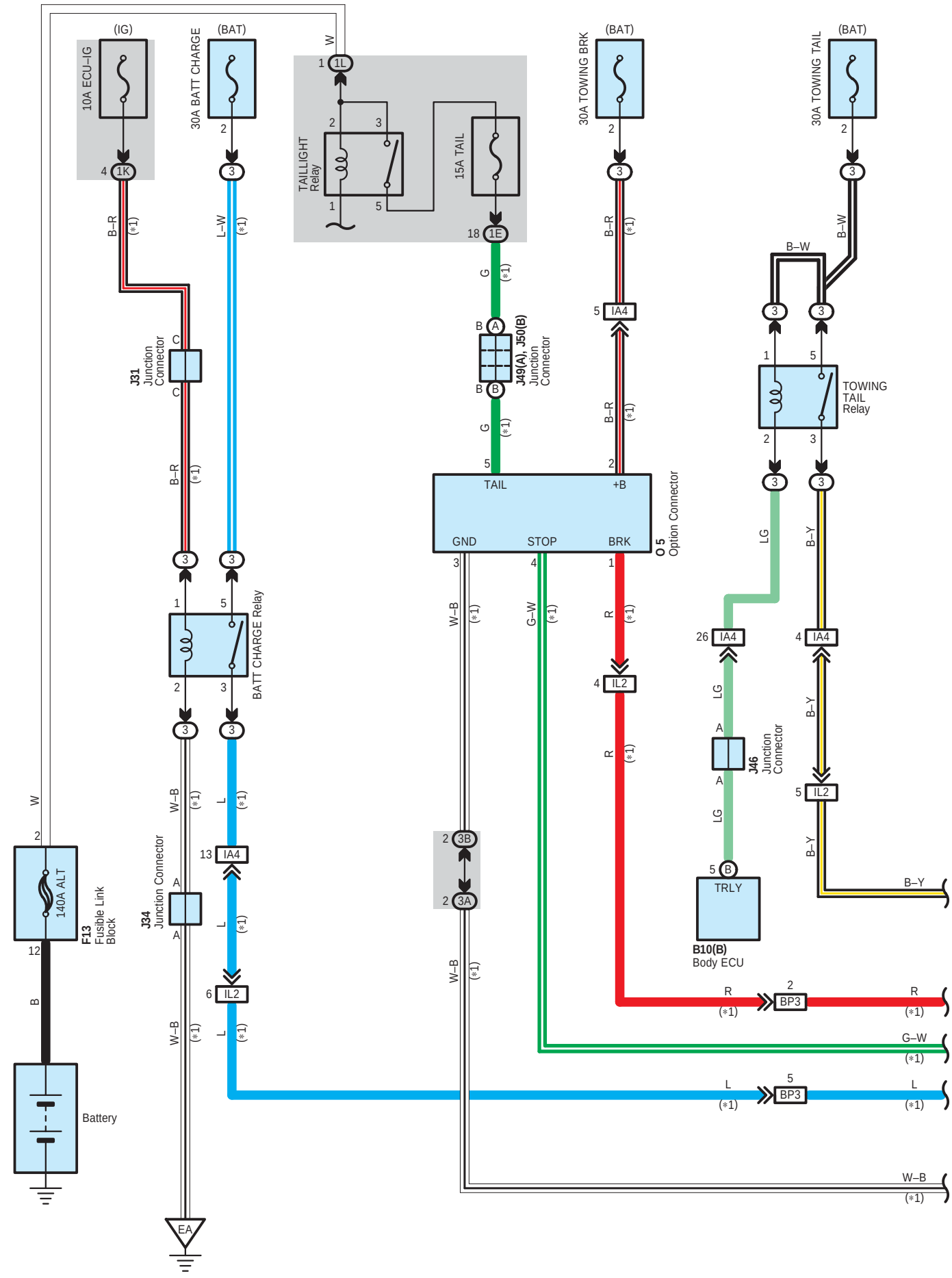
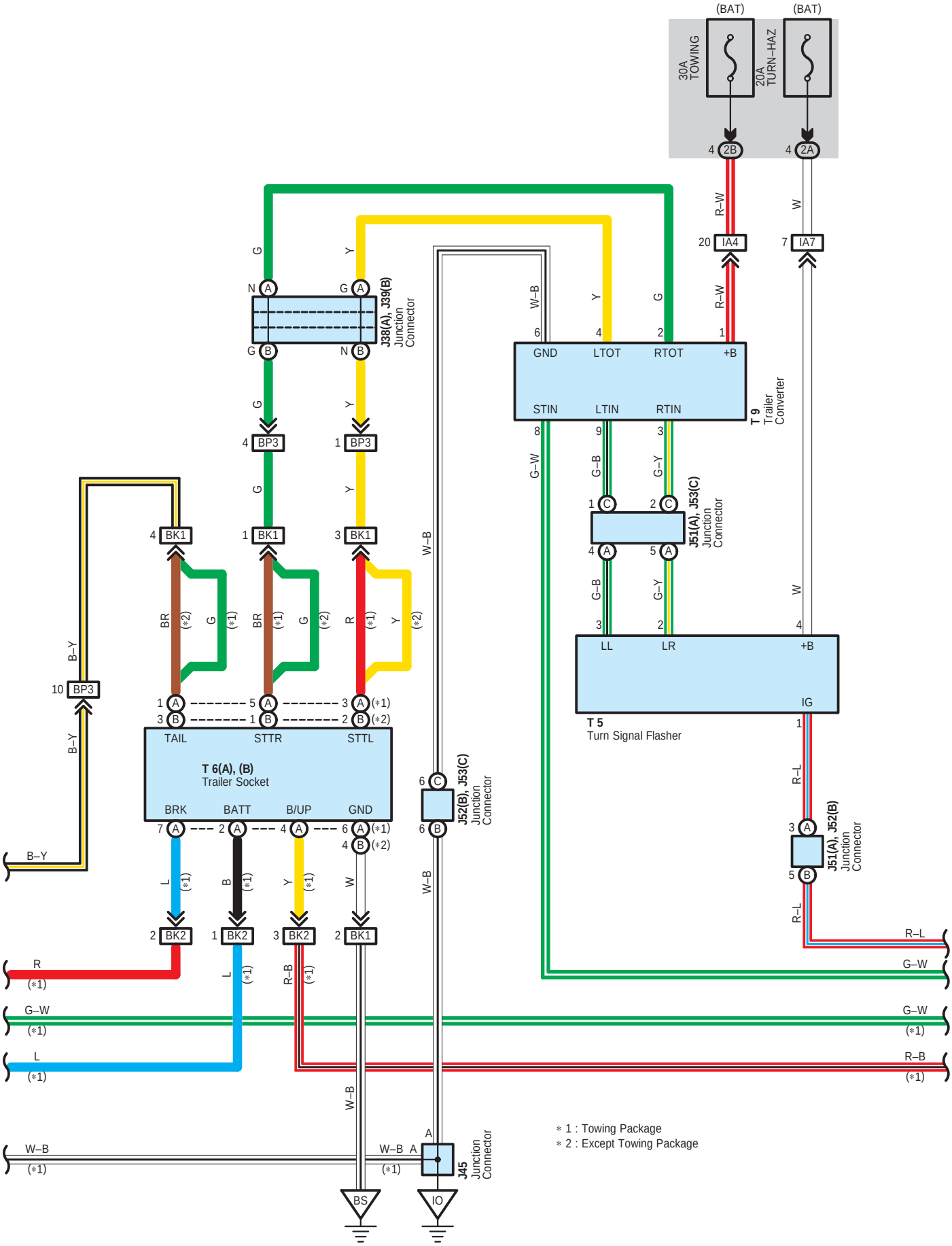
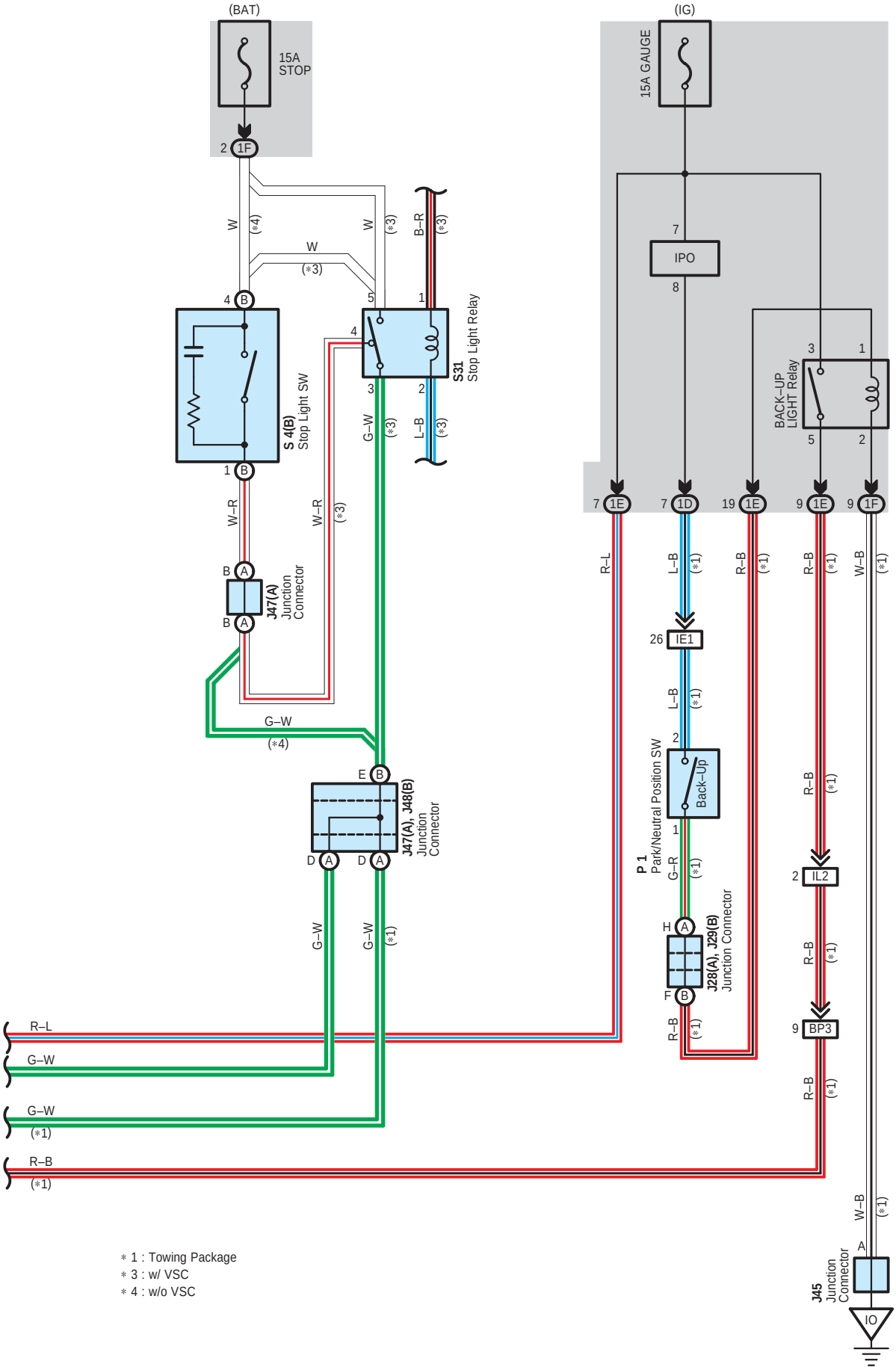

(IG)
10A ECU-IG
(BAT)
30A BATT CHARGE
W
1L
TAILLIGHT Relay
15A TAIL
(BAT)
30A TOWING BRK
(BAT)
30A TOWING TAIL
4 1K
3
2
18 1E
B–R (*1)
L–W (*1)
G (*1)
B–W
J31 Junction Connector
C
J49(A), J50(B) Junction Connector
B A
B B
5 IA4
TOWING TAIL Relay
1
5
2
3
TAIL
+B
GND
STOP
BRK
O5 Option Connector
BATT CHARGE Relay
W–B (*1)
G–W (*1)
R (*1)
LG
B–Y
26 IA4
4 IA4
4 IL2
5 IL2
J46 Junction Connector
A
LG
5 B
TRLY
B10(B) Body ECU
B–Y
2 3B
2 3A
J34 Junction Connector
13 IA4
6 IL2
L (*1)
W–B (*1)
R
2 BP3
G–W
5 BP3
L
W–B
2
F13 Fusible Link Block
140A ALT
12
B
Battery
EA


(BAT)
(BAT)
30A TOWING
20A TURN–HAZ
4 2B
4 2A
R–W
W
20 IA4
7 IA7
R–W
J38(A), J39(B) Junction Connector
GND
LTOT
RTOT
+B
STIN
LTIN
RTIN
T 9 Trailer Converter
J51(A), J53(C) Junction Connector
LL
LR
+B
IG
T 5 Turn Signal Flasher
J51(A), J52(B) Junction Connector
J52(B), J53(C) Junction Connector
BP3
BK1
BK2
T 6(A), (B) Trailer Socket
TAIL
STTR
STTL
BRK
BATT
B/UP
GND
J45 Junction Connector
BS
IO
B–Y
G
Y
W–B
G–B
G–Y
G–W
R–L
R–B
L
R
BR
W
(*1)
(*2)
∗ 1 : Towing Package
∗ 2 : Except Towing Package



∗ 1 : Towing Package
∗ 3 : w/ VSC
∗ 4 : w/o VSC

: Parts Location

Code	See Page	Code	See Page	Code	See Page
B10 B	72	J46	74	P1	71
F13	70	J47 A	74	S4 B	75
J28 A	74	J48 B	74	S31	75
J29 B	74	J49 A	74	T5	75
J31	71	J50 B	74	T6 A	77
J34	71	J51 A	74	T6 B	77
J38 A	74	J52 B	74	T9	75
J39 B	74	J53 C	74		
J45	74	O5	75		

: Relay Blocks

Code	See Page	Relay Blocks (Relay Block Location)
3	43	Engine Room R/B No.3 (Engine Compartment Left)

: Junction Block and Wire Harness Connector

Code	See Page	Junction Block and Wire Harness (Connector Location)
1D	49	Cowl Wire and Driver Side J/B (Lower Finish Panel)
1E		
1F		
1K	49	Engine Room Main Wire and Driver Side J/B (Lower Finish Panel)
1L		
2A	45	Engine Room Main Wire and Engine Room J/B (Engine Compartment Left)
2B		
3A	52	Cowl Wire and Sub J/B No.3 (Upper the Accelerator Pedal)
3B		

: Connector Joining Wire Harness and Wire Harness

Code	See Page	Joining Wire Harness and Wire Harness (Connector Location)
IA4	92	Engine Room Main Wire and Cowl Wire (Left Kick Panel)
IA7		
IE1	93	Engine Wire and Cowl Wire (Right Side of Instrument Panel)
IL2	92	Floor No.2 Wire and Cowl Wire (Right Kick Panel)
BK1	94	Frame Wire and Frame No.3 Wire (Near the License Plate Light)
BK2		
BP3	94	Frame Wire and Floor No.2 Wire (Under the Driver's Seat)

: Ground Points

Code	See Page	Ground Points Location
EA	90	Front Left Fender Apron
IO	92	Left Kick Panel
BS	94	Surrounding of the Front of the Fuel Tank